Dancoo DP

The smart and soundproof office pod
that brings nature back to the office.

dancoo
Quiet Smart Pods

Dancoo DP / Product Overview

Dancoo DP is a smart, nature-inspired office pod designed for extended focus work and high-quality video calls. The electric height-adjustable table and height-adjustable stool let you fine-tune your sitting posture to perfection — whether you prefer a higher perch or a lower, more relaxed position. The edge-free apple-curve LED panel diffuses light without dark corners. Every structural detail — from door frames to window frames — is crafted from solid birch plywood. A-Class soundproofing with an independent ISO 23351-1 test report — so deep work can return to its natural rhythm.

Dancoo DP / Product Highlights

A Workspace That Brings Nature Back

In a world overwhelmed by algorithms, DP offers a more natural, more relaxed way to work. You can adjust everything to suit your habits — or adjust nothing at all. Either way, everything you see and touch, from the door frame to the window frame to the light inside, is an expression of nature.

Natural Quiet — Verifiable A-Class Soundproofing

A-Class soundproofing (30dB+), independently verified to ISO23351-1 with a third-party test report. Your speech privacy is protected, and your surroundings remain undisturbed. You don't need to think about noise. Just work the most natural way you know how — in this quiet space.

Ventilation That Breathes Like Nature

The ventilation system is so quiet you hardly notice it — and that is exactly the point. You can start work immediately with the company-preset airflow, or adjust it anytime via the touchscreen to match your personal preference. Like natural breathing — present when you need it, unnoticed when you don't.

Flagship Configuration for Deep Focus

The electric height-adjustable desk and height-adjustable stool with dual footrests let you fine-tune your sitting posture to perfection. The Edge-free apple-curve LED panel diffuses light without dark corners. Built for extended deep work — so focus can return to its natural rhythm.

Dancoo DP / Technical Features

1. A-Class Soundproofing (30dB+)

Independently verified to ISO 23351-1 with a third-party test report. Speech privacy is protected without disturbing the surrounding environment.

2. Zero-Joint Front Facade

The front door leaf and frame are cut from a single sheet of HPL faced birch plywood — no seams, no visible joint lines. Available in white and a full range of colours from our colour catalogue.

3. Full Birch Plywood Structure

Door frames, door leaf, window frames, internal framework — all in solid birch plywood. Every surface you see and touch is natural.

4. Adaptive Ventilation

Custom dual fan design delivers 47 l/s maximum airflow — renewing the air in 56 seconds. Touchscreen adjustable. As natural as breathing.

5. Natural Lighting System

CRI ≥ 90, 4000K colour temperature, 500 lux desktop illuminance. Edge-free apple-curve LED panel (408×408mm) diffuses light freely. One-touch switch between Work and Video modes.

6. Secure Smart System

100% on-site data processing. No cloud. No third parties. Touchscreen control for lighting, ventilation, and smart booking. Your company logo can appear on the screen.

7. Three-Colour Occupancy Light

Green / Yellow / Red — occupancy status at a glance. See from a distance whether the pod is free, reserved, or occupied.

8. Modular Pre-Assembly

Walls, ceiling, electrical systems, interior finishes — fully pre-assembled at the factory into complete modules. On-site installation is reduced to connecting a few modules. Precision is maintained through multiple moves.

9. Electric Height-adjustable Desk & Stool

Height-adjustable desk with tilt safety sensor (76–116cm). Height-adjustable stool with dual footrests and pure wool upholstery (52–77cm, 135kg load capacity). Switch freely between sitting and standing.

10. Multiple Colour Front Options

Not limited to black — available in white and a full range of colours from our colour catalogue.

Dancoo DP / Design Details

Traditional craftsmanship and modern smart technology define every detail of this comfortable, nature-inspired flagship workstation. Lighting, booking, ventilation — all controls are within effortless reach, always adapting to your preferences. Everything you see, from the door frame to the window frame, is natural birch and high-CRI natural light. DP features an electric height-adjustable desk with tilt safety sensor, a height-adjustable stool with pure wool upholstery and dual footrests — allowing you to fine-tune your sitting posture to perfection, whether you prefer to sit higher or lower. The entire pod is built sustainably — walls, ceiling, electrical and smart systems fully pre-assembled at the factory into complete modules, ensuring structural precision for decades of use.

Four Image Notes

Electric Height-adjustable Desk & Stool

— Height-adjustable desk with tilt safety sensor (76–116cm). Stool with dual footrests and pure wool upholstery (52–77cm, 135kg load capacity). Fine-tune your sitting posture to perfection — whether you prefer to sit higher or lower.

Edge-free apple-curve LED Panel

— 408×408mm oversized luminous area. Borderless bottom-lit design diffuses light freely, eliminating dark corners. CRI ≥ 90, 4000K, 500 lux. One-touch switch between Work and Video modes.

Zero-Joint HPL Front Facade

— Cut from a single sheet of HPL faced birch plywood — no seams, no visible joint lines. Available in white and a full range of colours from our colour catalogue.

Secure Smart System Touchscreen

— Lighting, ventilation, booking — all controls integrated into the high-resolution touchscreen. Your company logo can appear on the screen. 100% on-site data processing — no cloud, no third parties.

Dancoo DP / Color Options

Dancoo Standard Color

Frame and Table Standard White HPL	Exterior RAL 9016 Standard White	Carpet Standard Warm	Interior PET Felt Standard Dark Grey	Carpet Standard Dark Grey	Exterior RAL 9005 Standard Black	Frame and Table Standard Black HPL

Exterior - Powder Coat Steel

RAL 9016 Standard White	RAL 7035 Light Grey	Dancoo Green Powder Coat	RAL 2012 Salmon Orange	RAL 3020 Traffic Red	RAL 5013 Cobalt Blue	**RAL 9005 Standard Black**

Frame and Table - HPL

Standard White	F0927 Formica	Dancoo Green HPL	F2962 Formica	F1238 Formica	F0806 Formica	**Standard Black**

Interior - PET Acoustic Felt

Standard Warm	PC2033	FG2125	FPE2120	PG2039	FB2021	PO2019
814	FG2032	FPE2121	FC2110	PG2018	**Standard Dark Grey**	A028

Stool Upholstery

Pure Wool Standard Grey	**Pure Wool Standard Warm**	DK-12	DK-53	DK-58	DK-43	MIN-21

Standard Smart Control System

Standard on all Dancoo Dawn Family models

High-resolution Touchscreen — Simple, Intuitive Control

The wall-mounted touchscreen integrates control of lighting and ventilation. Desk height is adjusted independently via a pair of mechanical up/down switches mounted directly beneath the screen — no need to navigate through touchscreen menus for height adjustment.

Company Wide Presets — Set Once, Use Everywhere

Tap the logo at the top of the screen five times to enter the administrator settings. This allows facility managers to configure presets that suit the majority of users in your office:

- **Local time** — set the correct time zone for your location
- **Scheduled ventilation** — ventilation can start before working hours and continue after closing, ensuring fresh air even when the pod is unoccupied
- **Default lighting & fan speed** — sets standard brightness and airflow (optimised for low noise), providing a consistent baseline for all users

Personalised Adjustment — When You Need It

Once inside, users can adjust lighting and fan speed to their personal preference. If no adjustment is made, the pod operates at the company-preset defaults — no extra steps required. When the user leaves, the system automatically reverts to the company wide presets, ready for the next user.

Company Logo Display

The screen can display your own company logo — every use reinforces your brand identity.

Optional Desktop Integrated Control Panel

An optional desktop mounted socket with integrated touchscreen offers three smart scene modes — “Phone,” “Work,” and “Relax” — each with preset light and fan combinations, switchable with a single tap. The panel integrates 65W fast charging, multi-standard sockets, and low voltage module ports — combining scene switching and power delivery into one compact module.

Smart Booking System

Standard hardware on all Dancoo Dawn Family models

Smart Booking — Walk In, Use Instantly

- Advance booking via mobile or PC
- On-site booking and one tap extension via touchscreen
- Three-Colour occupancy light: Green (available) / Yellow (reserved) / Red (occupied)

Book Anytime, Anywhere

Every Dancoo smart pod comes with booking system hardware pre installed as standard. The software is optional — simply specify your requirement at the time of ordering.

Once activated, the system enables:

- Advance booking via mobile phone or PC — reserve your pod before you arrive
- On-site booking via touchscreen — walk in and book instantly
- One tap extension — extend your session directly from inside the pod
- Three-Colour occupancy light — Green (available) / Yellow (reserved) / Red (occupied)

Simple Software Installation

The management software is installed on your own office computer. Installation is straightforward and we provide full guidance. For added convenience, we can also supply a compact industrial PC with the software pre installed — plug and play, ready to use.

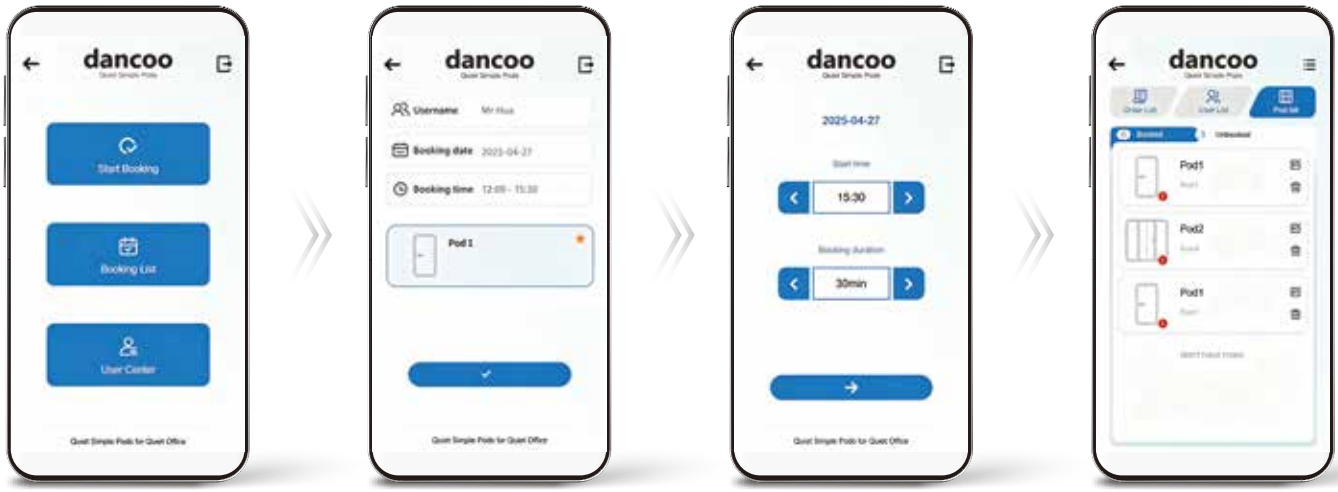

I. Performance & Certification

Acoustic Performance

Dancoo DP is acoustically tested in accordance with **ISO 23351-1**, achieving **Class A soundproofing (30dB+)** with an independent third-party test report. The pod can be placed adjacent to workstations without compromising speech privacy, and is well suited for extended focus work and high quality video calls.

Electrical Safety & Compliance

The complete electrical system of DP — comprising a **power supply, system control unit (including touchscreen and control circuit board), 2 fans, accent light**, apple curve LED panel, and occupancy light — has undergone system-level EMC testing. Tests were performed in accordance with **EN IEC 55015:2019+A11:2020 (emission) , EN IEC 61547:2023 (immunity) , EN IEC 61000-3-2:2019+A1:2021+A2:2024 (harmonics)** , and **EN 61000-3-3:2013+A1:2019+A2:2021 (voltage fluctuations and flicker)** , with testing conducted by **SGS** and compliant reports issued. Additionally, the combination was supplementarily tested for intermittent disturbance (clicks) in accordance with **CISPR 14-1**.

All luminaires used in DP have been individually safety tested in accordance with the Low Voltage Directive (LVD) **2014/35/EU**. Testing was performed to **EN IEC 60598-1:2024+A11:2024** (general safety requirements for luminaires), **EN IEC 60598-2-1:2021** (particular requirements for fixed general purpose luminaires), **EN IEC 62031:2020+A11:2021** (safety requirements for LED modules), and **EN 61347-2-13:2024** (safety requirements for LED drivers), with compliant reports issued by **SGS**.

Fan CE compliance is based on **LVD Directive 2014/35/EU** and **EMC Directive 2014/30/EU**, with applicable standards including **EN 60335 series, EN 62233** , and **EN IEC 55014 series**.

II. Systems & Functions

Ventilation System

The pod is equipped with custom DC brushless (BLDC) fan modules, designed and developed by **Dancoo Denmark A/S** and assessed for CE compliance. The system comprises **2 fans**, delivering a total maximum airflow of **234 CFM (≈397 m³/h)** , with a measured full air exchange time of 56 seconds (theoretical: 30 seconds). The fans feature dedicated vibration isolation mounts, PWM intelligent stepless speed control, and dual ball bearings, ensuring 70,000-hour long-life operation. Full-load operating noise is **41.8 dB(A)** . Airflow is adjustable via the touchscreen.

Lighting System

DP features a modular LED lighting system with an **Edge-free apple-curve LED panel (408×408mm)** as the primary ceiling luminaire, delivering **2500 lm, CRI ≥ 90, 4000K** colour temperature, and up to **500 lux** desktop illuminance. The borderless bottom-lit design diffuses light freely, eliminating dark corners. A **100×600mm accent light (800 lm)** is wall-mounted to provide optimised facial illumination for video calls. The **Three-Colour occupancy light (RGB, 0.6W)** is optional, mounted on the top exterior of the pod for occupancy status indication.

III. Structure, Materials & Certification

Door & Hardware

DP features a framed door design. The door frame and door leaf are crafted from a **single sheet of HPL faced birch plywood — Zero-Joints, zero visible seams** on the front facade. Custom colours are available according to the HPL colour catalogue. The door handle is an **HPL faced birch plywood handle**, operable from both sides with push/pull action. The hinge is **German SIMONSWERK concealed hinge** as standard. Standard handing is **right-handed** (hinges on the right when viewed from outside), with **left-handed** available on request — must be specified at time of order, with additional charges applicable.

Materials & Craftsmanship

The exterior finish is **powder-coated steel**, stamped in a single piece and attached to the structure with integrated magnets. The door frame and door leaf are cut from a single sheet of HPL faced birch plywood.

Interior panels are **PET acoustic material.** Carpet is **anti-static, stain-resistant low-loop pile**. The entire structural framework — door frames, door leaf, window frames, internal structural framework — is constructed entirely from **solid birch plywood**. All frameworks are **pre-assembled at the factory**.

Birch Plywood Raw Material CE Certification

The birch plywood raw material has obtained **CE certification**, confirming compliance with the factory production control (FPC) system requirements specified in **EN 13986:2004+A1:2015** and **EN 636:2012+A1:2015** (**System 2**+ certification level), covering three technical classes: EN 636-1 (dry conditions), EN 636-2 (humid conditions), and EN 636-3 (external conditions). The certification has been issued by a competent notified body and is maintained through regular surveillance audits. The supplier holds **FSC Chain of Custody certification (FSC-C141102)** .

Interior Panel Fire Rating

The interior panels have been tested for fire rating in accordance with **EN 13501-1:2018**. Test methods include **EN 13823:2020** (single burning item test) and **EN ISO 11925-2:2020** (small flame ignition test), performed by **SGS**. Fire rating: **B s1, d0** (fire performance Class B, smoke production Class s1, no flaming droplets Class d0).

Whole Product Certification

- **SGS Certification**: Class A soundproofing validation with independent ISO 23351-1 test report
- **CE Compliance: LVD 2014/35/EU · EMC 2014/30/EU** · EN 60335-1 · EN 62368-1 · EN 61000-6-1/-6-3 · IEC 60598-1
- **Fire Safety: BS EN 13501-1:2018, B s1, d0**
- **Materials: FSC compliant** birch plywood · low VOC finishes
- **Recyclability**: Modular design for long-term use and end-of-life material recovery
- **Warranty: 5-year warranty** in accordance with Dancoo Warranty Terms 2026

IV. Configuration, Power & Dimensions

Furniture Configuration

The pod is equipped with an **electric height-adjustable desk**, dimensions **76.7cm (W) × 46.2cm (D)** , height adjustment range **76–116cm**, maximum load **50kg**, with tilt safety sensor. The **height-adjustable stool** is standard, featuring a **39×39cm** seat, height adjustment range **52–77cm**, maximum load **135kg**, with upholstery available in **pure wool or polyester double structure fabric**, complemented by **dual footrests** for ergonomic support.

Power & Consumption

The desk power and data port system is the **Premium (All in 80mm)** configuration, featuring an integrated multi-standard power socket (configurable per target market), a **45W USB A + USB C charging combo** (shared), with one **RJ45 network port** as standard plus one spare port (configurable as RJ45, HDMI, Type C data, or cable pass through), and one fixed **Type C data port**.

Default power consumption: **22W** · Maximum: **53W** · Standby: **7W** (with optional occupancy light)

Input voltage: **100-240VAC**

The pod is equipped with an IEC 320 C14 inlet for mains power connection. A 3-metre detachable power cord is supplied — terminated with an IEC 320 C13 connector at the pod end and a standard mains plug (configurable per target market) at the wall end. The network extension cable is 1 metre in length, terminated with an RJ45 female socket, and can be extended or terminated with an RJ45 male connector upon request.

Cable Exit Configuration

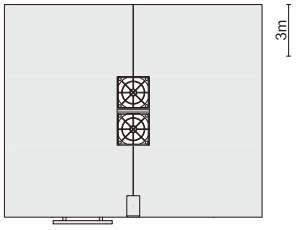

3m detachable power cord -IEC 320 C13 connector atpod end, mains plug at wall end

V. Physical Dimensions & Packaging

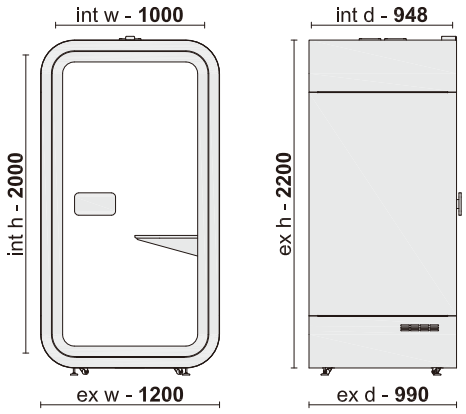

Dimensions / Top View

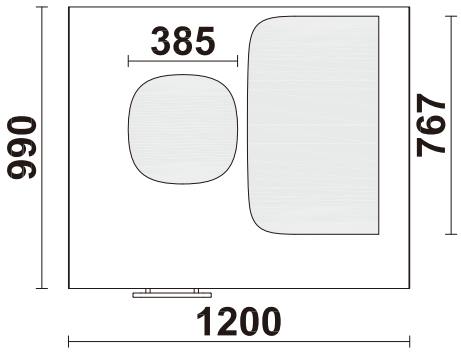

Exterior (cm)	
Height	220
Width	120
Depth	99

Interior (cm)	
Height	200
Width	100
Depth	94.8

Doorway (cm)	
Height	204.6
Width	104.6

Operating Space (cm)	
Height	220
Width	217.6
Depth	203.8

Crate Size (cm)	
Length	227
Width	96.6
Height	125

Weight & Volume	
Net	420 kg
Gross	540 kg
Volume	2.7 m³

Container Loading	
20' GP	6 pods
40' GP	12 pods
40' HQ	24 pods

Table (cm)	
Height	76–116
Width	76.7
Depth	46.2

VI. SAFETY

Fire safety

No fire-hazardous materials are used in Dancoo soundproof pods, All surface materials, and soundproofing materials have undergone testing and classification for fire safety by national or international standards.

Dancoo provides additional safety measures to comply with local regulatory requirements.

Fire Safety Service Openings

The top of the pod provides fire safety service openings for the installation of **sprinklers, emergency warning and intercommunication system (EWIS) speakers**, and **smoke detectors**. These openings must be specified by the customer at the time of order. Dancoo will provide drawings indicating the permitted areas for openings, allowing customers to select the preferred locations. If not specified at the time of order, the product will be shipped without any pre drilled openings.

Seismic safety

An optional seismic anchoring kit for a pod is available for the seismic regions. The kit consists

of brackets that further reinforce the pod structure to withstand heavy seismic forces.

Note: The crate base skids are designed with a height of 5cm (instead of the typical 9cm) to allow two pods to be stacked inside a 40-foot high-cube container. The stated crate height excludes the 5cm skid height. The skid openings are positioned for fork operation along the width direction only. If operation from both the width and length directions is required, this must be specified at the time of order.

Dancoo DP / Family

A Member of the Dancoo Dawn Family

Dancoo DP is one of twelve configurations in the Dawn Family — a product family unified by six shared commitments and a single material philosophy: solid birch plywood as the structural core, creating warmth in an office environment dominated by steel and aluminium.

The Six Genes of Dancoo — shared by every Dawn Family product:

Third-party Acoustic Reports — Each model comes with its own independent ISO23351-1 test report.

Zero-Joint Design — Front door and frame are crafted from a single sheet of material — no seams, no visible lines. Available in white, grey, and more.

Full Birch Plywood Structure — Door frames, door leafs, window frames, internal structures — all in solid birch plywood. Dancoo builds warmer, more natural environments with birch.

Secure Smart System — 100% of usage data is processed on-site, within your own infrastructure. No cloud. No third parties.

Natural Lighting System — CRI ≥ 90. Custom-engineered fixtures — panel lights as thin as 14mm.

Modular Pre-Assembly — Walls, ceiling, electrical systems, interior finishes — fully pre-assembled at the factory into complete modules. On-site installation is reduced to connecting a few modules.

One Family. Twelve Configurations. One Standard.

DC · DCG · **DP** · DS · DH · DHG · DL · DLG · 2S · 2D · 2S2 · 2S2G

From compact phone booths to spacious meeting pods, from HPL faced birch to full-glass doors, the Dawn Family covers the full spectrum of individual and collaborative work — all built around a single material philosophy: birch as the structural core, creating warmth in an office environment dominated by steel and aluminium.

Dancoo DP — one of twelve. One standard. One family.

Dancoo Dawn Family

DC
— Compact phone booth. Fixed table. Optional seat. HPL faced birch door with framed glass.

DCG
— Compact phone booth. Fixed table. Optional seat. Full-glass door for transparency and modern aesthetics.

2S
— Flex pod. One footprint, two functions — workstation or meeting room. Fixed table (swappable between modes). Just 2.48m².

DS
— Standard workstation. Electric height-adjustable table. No seat included — for standing work or your own chair. Edge-free apple-curve LED (408×408mm).

DH
— Hardened workstation. Fixed table. Optional height-adjustable seat. Round corner LED panel (408×408mm). Durable for high-traffic areas.

2D
— Double door meeting pod. Two doors with a central pillar. Spacious interior. Standard table. Dual sofas. Double the comfort.

DP
— Premium workstation. Electric height-adjustable table. Height-adjustable stool with dual footrests. Edge-free apple-curve LED (408×408mm).

DHG
— Hardened workstation with full-glass door. Fixed table. Optional height-adjustable seat. Round corner LED panel (408×408mm). Transparent and inviting.

2S2
— Symmetrical meeting pod. Face-to-face layout. Standard table. Dual sofas. Rectangular LED panel (850×180mm).

DL
— Lounge Workstation. Sofa (60×84cm, seat width 45cm) included. Fixed table (height-adjustable optional). Edge-free apple-curve LED (408×408mm). Genuine lounge comfort.

DLG
— Lounge Workstation · Glass Door. Sofa (60×84cm, seat width 45cm) included. Fixed table (height-adjustable optional). Oversized flat LED panel (408×408mm). Genuine lounge comfort.

2S2G
— Symmetrical meeting pod with full-glass doors. Face-to-face layout. Standard table.Dual sofas. Rectangular LED panel (850×180mm). Transparent and modern.